PNP Sensors switch the ouput to +24V

PNP NO - Normally open but closed when Metal detected

PNP NO

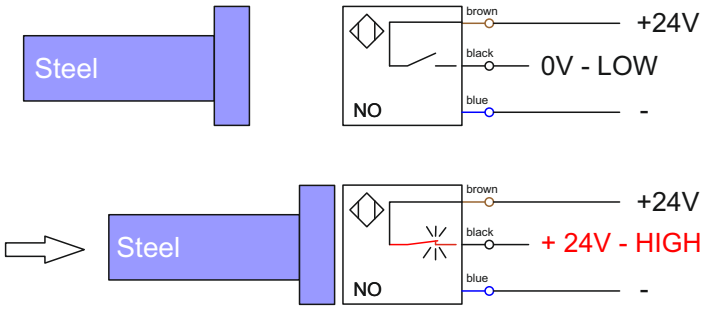

PNP NC - Normally closed but open when Metal detected

PNP NC

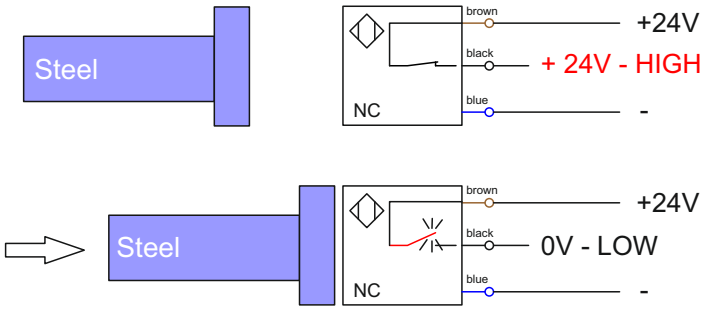

NPN Sensors switch the ouput to 0V

NPN NO - Normally open but closed when Metal detected

NPN NO

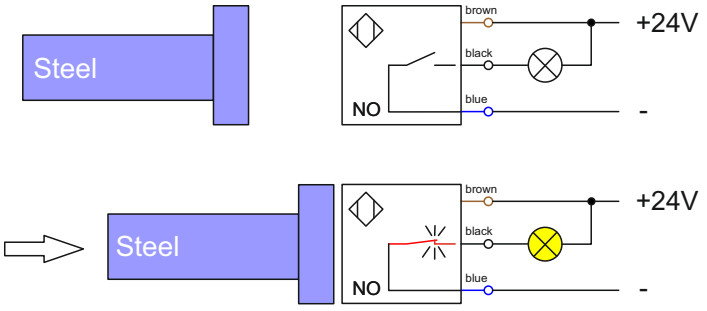

NPN NC - Normally closed but open when Metal detected
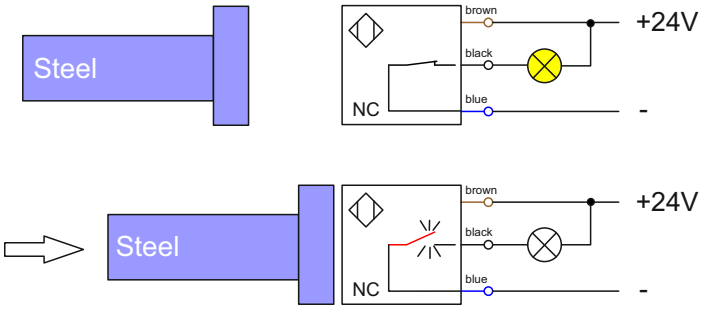
NPN NC