iHSV42 Integrated AC Servo Motors

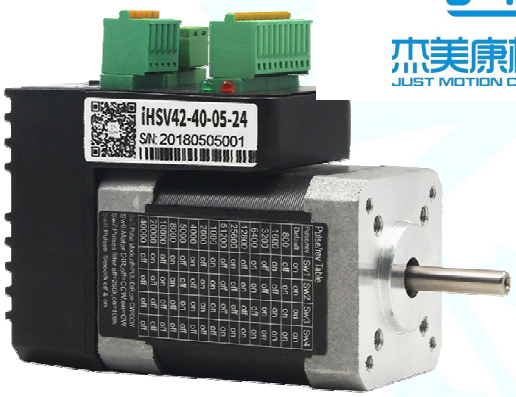

1. Features:

- High positioning accuracy
- High torque
- Cost-effective high speed response
- Smooth and very low noise
- Compact size
- Pulse Input Mode Pulse + Direction
- Current Loop Bandwidth:（-3dB）2KHz (Typical)
- Speed Loop Bandwidth: 500Hz (Typical)
- Position Loop Bandwidth: 200Hz (Typical)
- Parameters to download via RS232 to PC.
- Users can define subdivisions via external Dial-up switches or via software.
- Over-current, I2T-motor-current-observation, Over-voltage, Under-voltage, Over-heat, Over-speed, protections.

2. Description:

The iHSV42-XX AC servo motor consists of a perfectly tuned servo driver integrated in a servo motor, vector controlled and with DSP chip. The system saves installation space, cabling between driver, motor and encoder, and is very profitable due to its low purchase price.

3. Applications:

iHSV42-XX can be used in various applications such as laser cutters, laser markers, high precision X-Y tables, labelling machines, CNC router, etc. Its unique features make the iHSV42-XX an ideal choice for applications that require low-speed smoothness and high torque at higher revolution by small mounting space.

4. Naming Rules:

iHSV XX - XX - XX - XX - XX - XX - XX

1 2 3 4 5 6 7 8

1. Integrated Servo motor
2. Motor frame size: 42 ≙ 42 mm
3. Motor revolution: (unit: x 100 RPM) 10 ≙ 1000 RPM, 20 ≙ 2000 RPM, 30 ≙ 3000 RPM, 40 ≙ 4000 RPM
4. Output Power: (unit: x 10 W) 05 ≙ 50 W; 10 ≙ 100 W; 20 ≙ 200 W
5. Motor rated DC voltage: 24 ≙ 24 V, 36 ≙ 36 V, 48 ≙ 48V
6. Shaft length: no digit=24mm
7. Pilot diameter: no digit = 22 mm
8. Special equipment: SC ≙ with brake
   RC ≙ MOD-/CAN-Bus
   POCA ≙ It is necessary to disconnect the power supply to reset an alarm

5. Electrical Specifications:

Parameters	Min	Typical	Max	Unit
Input Voltage	20	24	36	VDC
Pulse per revolution	4	-	51200	Pul./rev.
Pulse input frequency		-	200	kHz
Pulse Voltage	3.3	5	24 (with R– 5kΩ)	V
Logic Signal Current	7	10	16	mA
Isolation Resistance	100	-	-	MΩ

This document is protected by copyright

iHSV42 Integrated AC Servo Motors

6. Motor Specifications:

Name:	iHSV42-40-05-XX-XX	iHSV42-40-07-XX-XX*	iHSV42-40-08-XX-XX		Unit
Rated Power	52	78	80		W
Rated Torque	0.125	0.185	0.185		N·m
Rated Speed	4000	4000	4000		min^{-1}
Max. Speed	4000	4000	4000		min^{-1}
Rated Voltage	24	24	24		V
Rated Current	3.4	5.1	5.1		A
Weight	0.57	0.80	0.84		kg
* to be discontinued					

7. Operating Environment:

Cooling	Natural cooling or forced cooling	
Operating Environment	Environment	Avoid dust, oil, fog and corrosive gases
	Ambient Temperature	0℃ — 40℃
	Humidity	40 %RH — 90 %RH
	Operating Temperature	max. 70℃
Storage Temperature	-20℃ — 80℃	

8. Mechanical Specification:

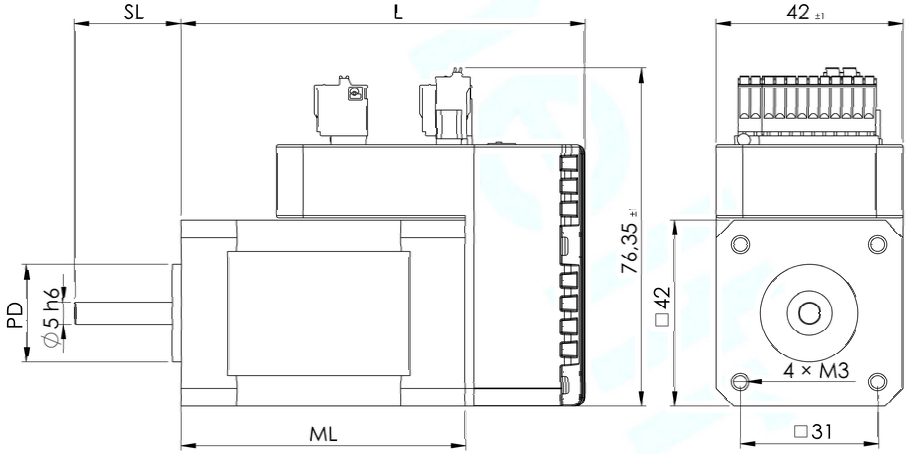

Name:	Motor length	Length of motor and drive (L)	Shaft Length	Pilot Diameter
iHSV42-40-05-24-XX	64	91	24	22
iHSV42-40-07-24-XX*	83	110	24	22
iHSV42-40-08-24-XX	83	110	25	22
* to be discontinued				

This document is protected by copyright

9. Protection Indications:

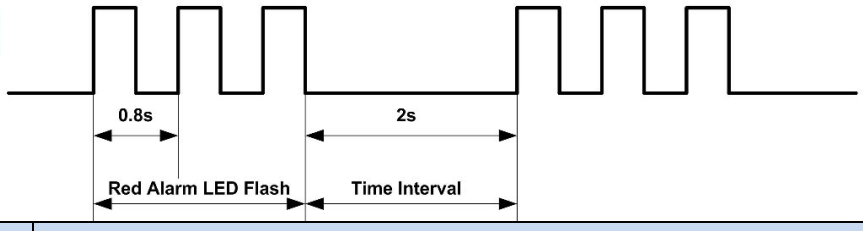

LED light flashes	Alarm description
2 times	Drive over current
3 times	Driver position deviation exceeds set value
4 times	Driver encoder alarm
6 times	Under voltage
7 times	Driver overload

10. Connectors and Pin Assignment

The iHSV(C)57-XX has three connectors, one connector for power connections, another one for control signal connections and a third one for RS232 communication connections.

Power Connector +VDC			
Pin	**Name**	**I/O**	**Description**
1	**DC+**	I	Power Supply Input (Positive) 43 – 53 / 65 - 79VDC; 48 / 72 V is typical. Recommended to leave reasonable reserve for voltage fluctuation and back-EMF during deceleration.
2	**GND**	GND	Power Ground (Negative)

Control Signal Connector			
Pin	**Name**	**I/O**	**Description**
1	**ALM-**	O	Alarm Signal: OC output signal, activated when one of the following protection is activated: over-voltage and over current error. They can sink or source MAX 8 mA current at 24 V, respectively 200 mW. The impedance between ALM+ and ALM- is high for normal operation and becomes low when any protection is activated.
2	**ALM+**	O	
3	**PED-**	O	In-position Signal: OC output signal, activated when actual motor position reaches to target Position. This port can sink or source MAX 8 mA current at 24 V, respectively 200 mW. The impedance between PED+ and PED- is high for normal operation and becomes low when the target position is reached.
4	**PED+**	O	
5	**ENA-**	I	Enable signal: This signal is used for enabling/disabling the drive board. By default, high level (NPN control signal) for enabling the drive board and low level for disabling the drive board. It is usually left Unconnected (Enabled). Please note that the PNP and Differential control signals are on the contrary, namely Low level for enabling. (optional: SW5 ON direction of rotation CW/CCW)
6	**ENA+**	I	
7	**DIR-**	I	Direction Signal: In single-pulse mode, this signal has low/high voltage levels, representing two directions of motor rotation. For reliable motion response, DIR signal should be ahead of PUL signal by 5µs at least. 3.5-24V for DIR-HIGH, 0-0.5V for DIR-LOW. Toggle DIP switch S6 to reverse motion direction. (optional: SW5 ON direction of rotation CW/CCW)
8	**DIR+**	I	
9	**PUL-**	I	Pulse Signal: In single pulse (pulse/direction) mode, this input represents pulse signal, active at each rising or falling edge (Software configurable). 3.5 – 24 V for PUL-HIGH, 0 - 0.5 V for PUL-LOW. For reliable response, pulse width should be longer than 2.5µs for 200kHz MAX input frequency.
10	**PUL+**	I	

This document is protected by copyright

RS232 Communication Port				
Pin	**Name**	**Colour at round beige Cable**	**Colour at flat grey Cable**	**Description**
1	**NC**	-	-	Not used
2	**RX**	Brown-White	Yellow	RS232 Receive Data
3	**GND**	Blue	Green	Ground
4	**TX**	Blue-White	Red	RS232 Transmit Data
5	**VCC**	-	-	Power Supply 3.3 V to HISU. Attention: For PC software use, leave unconnected!

Note 1: The RS232 communication port is not isolated. Please use an isolated power supply for the iHSSXX when the PC's serial port is not isolated.

Note 2: Do not plug or unplug the connector when power is on.

11. DIP Switch Settings:

Pulses per revolution of the iHSS-XX can be configured via DIP switch SW1-SW4 or by the tuning software. When all SW1-SW4 are at "ON" positions, the drive will take the setting set by the software. In this case, a user can re-configure to any value between 4 and 51200 through software. If any bit of SW1-SW4 is at "OFF" position, the integrated drive board will take micro step resolution setting determined by bit positions of SW1-SW4. Use the following table for their resolution settings via the DIP switches.

Pulses / Revolution	SW1	SW2	SW3	SW4
Software configured	On	On	On	On
800	Off	On	On	On
1600	On	Off	On	On
3200	Off	Off	On	On
6400	On	On	Off	On
12800	Off	On	Off	On
25600	On	Off	Off	On
51200	Off	Off	Off	On
1000	On	On	On	Off
2000	Off	On	On	Off
4000	On	Off	On	Off
5000	Off	Off	On	Off
8000	On	On	Off	Off
10000	Off	On	Off	Off
20000	On	Off	Off	Off
40000	Off	Off	Off	Off

SW 5: S5 is used for setting the active edge of the input signal, "off" -means the active edge is the rising edge, while "on" is the falling edge.

SW 6: DIP switch S6 is used for changing motor shaft rotation direction. Changing position from "ON" to "OFF", or "OFF" to "ON" will reverse rotation direction of the iHSV(C)57-XX.

This document is protected by copyright

12. Fine Tuning:

Standard parameters are already set ex works. These standard parameter values are optimized and suitable for most industrial applications. In most cases it is not necessary to change them. However, if you want to optimize the performance for your application, the software can be used to adjust these parameters

.

13. Typical Connections:

Connection to Common Anode:

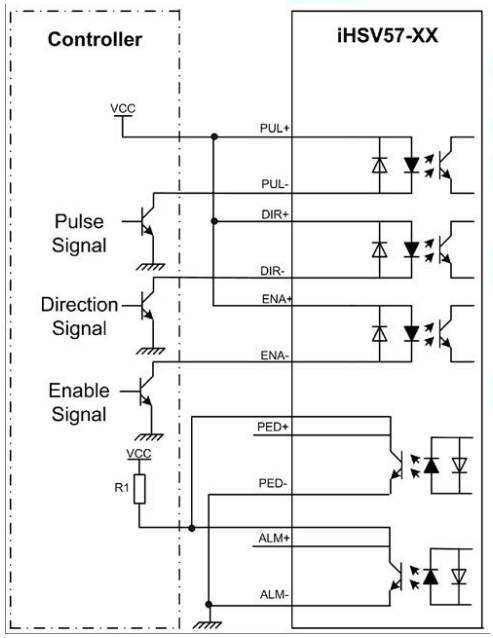

Connection to Common Cathode:

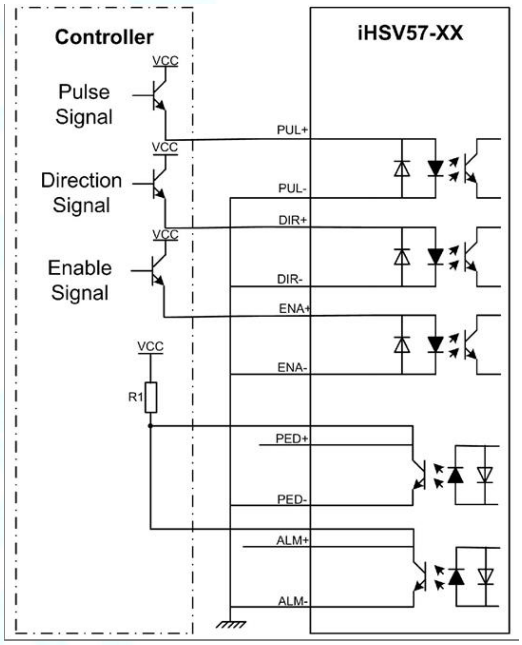

Connection to Differential Signal:

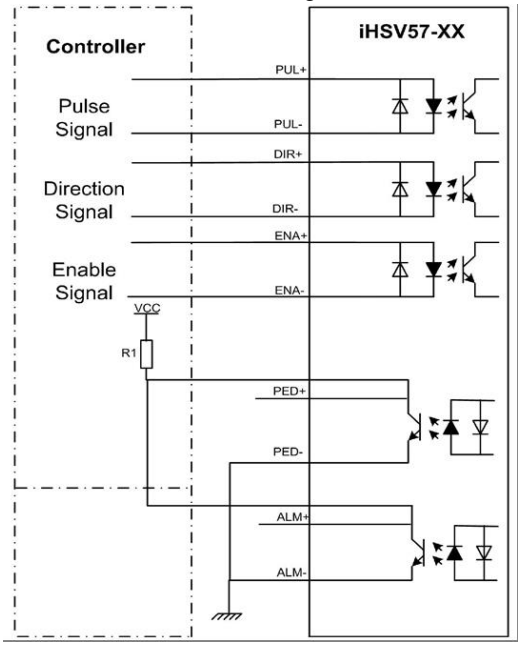

14. RS232 Communication Cable Connections:

Note 1: The RS232 communication port is not isolated. Please use a galvanic isolated power supply for the iHSV42-XX when the PC's serial port is not isolated.

Note 2: Do not plug or unplug the connector when power is on.

Definition		Remark
RX		Receive Data
GND		Power Ground
TX		Transmit Data
OR		
NC		Reserved
RX		Receive Data
GND		Power Ground
TX		Transmit Data
VCC		Power Supply to HISU

This document is protected by copyright